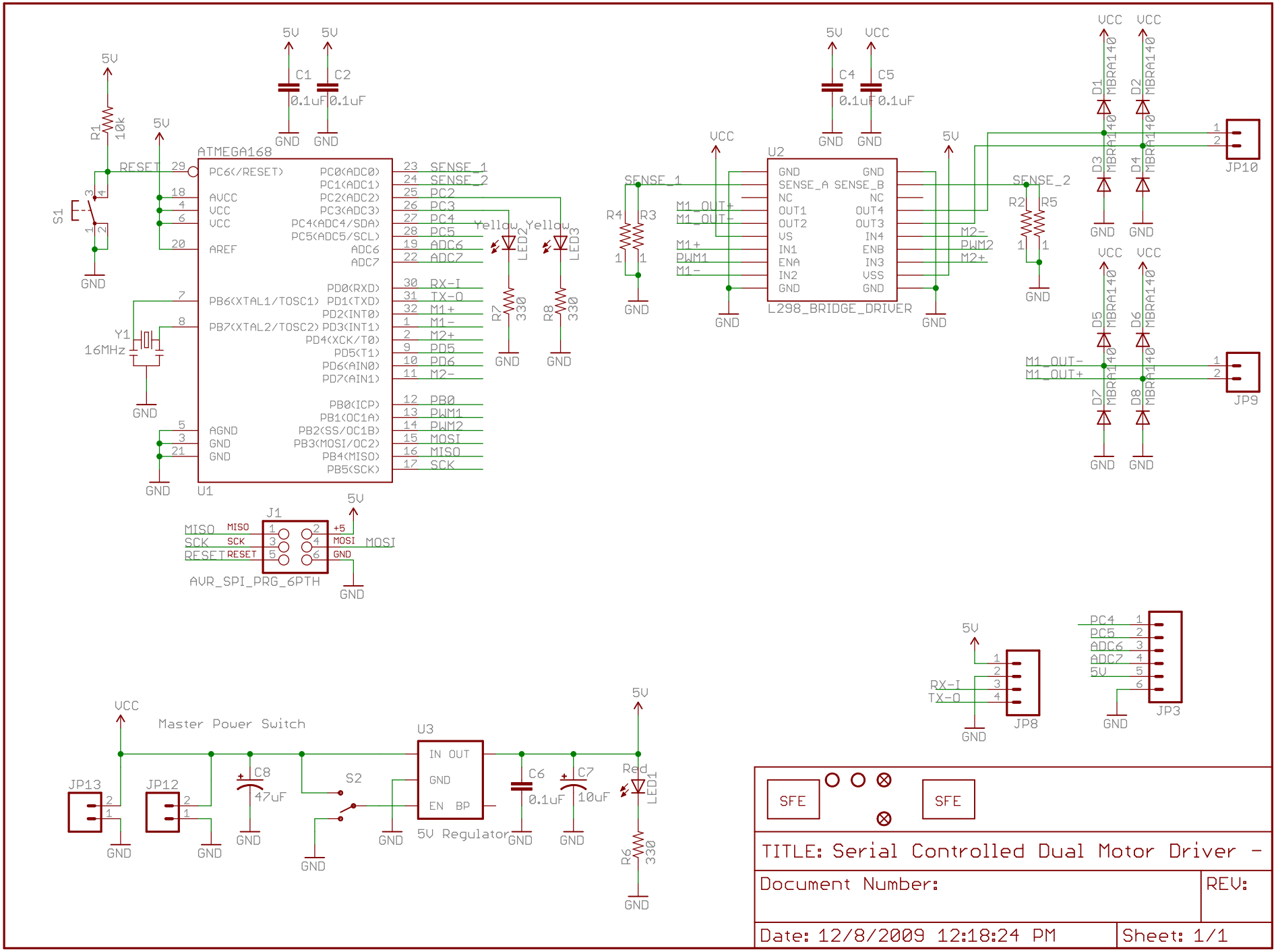
ATMEGA168
U1
PC6(/RESET)
AVCC
VCC
VCC
AREF
PB6(XTAL1/TOSC1)
PB7(XTAL2/TOSC2)
AGND
GND
GND
PC0(ADC0)
PC1(ADC1)
PC2(ADC2)
PC3(ADC3)
PC4(ADC4/SDA)
PC5(ADC5/SCL)
ADC6
ADC7
PD0(RXD)
PD1(TXD)
PD2(INT0)
PD3(INT1)
PD4(XCK/T0)
PD5(T1)
PD6(AIN0)
PD7(AIN1)
PB0(ICP)
PB1(OC1A)
PB2(SS/OC1B)
PB3(MOSI/OC2)
PB4(MISO)
PB5(SCK)
SENSE_1
SENSE_2
PC2
PC3
PC4
PC5
ADC6
ADC7
RX-I
TX-O
M1+
M1-
M2+
PD5
PD6
M2-
PB0
PWM1
PWM2
MOSI
MISO
SCK
RESET
R1 10k
S1
Y1 16MHz
C1 0.1uF
C2 0.1uF
LED2 Yellow
LED3 Yellow
R7 330
R8 330
J1
AVR_SPI_PRG_6PTH
MISO
SCK
RESET
+5
MOSI
GND
U2
L298_BRIDGE_DRIVER
GND
SENSE_A
SENSE_B
NC
OUT1
OUT2
VS
IN1
ENA
IN2
OUT4
OUT3
IN4
ENB
IN3
VSS
M1_OUT+
M1_OUT-
M2-
PWM2
M2+
C4 0.1uF
C5 0.1uF
R4
R3
R2
R5
D1 MBRA140
D2 MBRA140
D3 MBRA140
D4 MBRA140
D5 MBRA140
D6 MBRA140
D7 MBRA140
D8 MBRA140
JP10
JP9
JP8
JP3
RX-I
TX-O
PC4
PC5
ADC6
ADC7
5V
Master Power Switch
JP13
JP12
C8 47uF
S2
U3
IN OUT
GND
EN BP
5V Regulator
C6 0.1uF
C7 10uF
LED1 Red
R6 330
SFE
SFE
TITLE: Serial Controlled Dual Motor Driver - v11
Document Number:
REV:
Date: 12/8/2009 12:18:24 PM
Sheet: 1/1